Cambridge Assessment International Education
Cambridge International General Certificate of Secondary Education

CANDIDATE NAME	

CENTRE NUMBER						CANDIDATE NUMBER				

8057635515

CHEMISTRY **0620/42**

Paper 4 Theory (Extended) **May/June 2019**

1 hour 15 minutes

Candidates answer on the Question Paper.

No Additional Materials are required.

READ THESE INSTRUCTIONS FIRST

Write your centre number, candidate number and name on all the work you hand in.
Write in dark blue or black pen.
You may use an HB pencil for any diagrams or graphs.
Do not use staples, paper clips, glue or correction fluid.
DO **NOT** WRITE IN ANY BARCODES.

Answer **all** questions.
Electronic calculators may be used.
A copy of the Periodic Table is printed on page 16.
You may lose marks if you do not show your working or if you do not use appropriate units.

At the end of the examination, fasten all your work securely together.
The number of marks is given in brackets [ ] at the end of each question or part question.

This syllabus is regulated for use in England, Wales and Northern Ireland as a Cambridge International Level 1/Level 2 Certificate.

This document consists of **13** printed pages and **3** blank pages.

© UCLES 2019

Cambridge Assessment International Education

[Turn over

www.exam-mate.com

1 The names of eight substances are given.

aluminium oxide	**calcium oxide**	**ethanol**	**nitrogen**
iron(III) oxide	**methane**	**oxygen**	**silicon(IV) oxide**

Answer the following questions about these substances.
Each substance may be used once, more than once or not at all.

State which substance is:

(a) the main constituent of natural gas

..... [1]

(b) a reactant in respiration

..... [1]

(c) the main constituent of bauxite

..... [1]

(d) a product of photosynthesis

..... [1]

(e) a greenhouse gas

..... [1]

(f) a macromolecular solid.

..... [1]

[Total: 6]

www.exam-mate.com

2 **(a)** $^{22}_{11}Na$, $^{23}_{11}Na$ and $^{24}_{11}Na$ are isotopes of sodium.

(i) Describe how these sodium isotopes are the same and how they are different in terms of the total number of protons, neutrons and electrons in each.

same .....

.....

different .....

.....
[3]

(ii) Why do all **three** isotopes have an overall charge of zero?

.....

..... [1]

(iii) Why do all **three** isotopes have the same chemical properties?

.....

..... [2]

(iv) Why do sodium ions have a charge of +1?

.....

..... [1]

(b) Carbon is an element which exists in different forms.

(i) Name **two** forms of the element carbon that have giant covalent structures.

..... and ..... [1]

(ii) Name the oxide of carbon that is a toxic gas.

..... [1]

[Total: 9]

www.exam-mate.com

3 This question is about phosphorus and compounds of phosphorus.

(a) Phosphorus has the formula P_4. Some properties of P_4 are shown.

melting point / °C	45
boiling point / °C	280
electrical conductivity	non-conductor
solubility in water	insoluble

(i) Name the type of bonding that exists between the atoms in a P_4 molecule.

..... [1]

(ii) Explain, in terms of attractive forces between particles, why P_4 has a low melting point.

.....

..... [1]

(iii) Explain why phosphorus is a non-conductor of electricity.

.....

..... [1]

(b) Phosphorus, P_4, reacts with air to produce phosphorus(V) oxide, P_4O_{10}.

(i) Write a chemical equation for this reaction.

..... [2]

(ii) What type of chemical reaction is this?

..... [1]

(c) Phosphorus(V) oxide, P_4O_{10}, is an acidic oxide.

Phosphorus(V) oxide, P_4O_{10}, reacts with aqueous sodium hydroxide to form a salt containing the phosphate ion, PO_4^{3-}. Water is the only other product.

Write a chemical equation for the reaction between phosphorus(V) oxide and aqueous sodium hydroxide.

..... [2]

www.exam-mate.com

(d) Phosphine has the formula PH_3.

Complete the dot-and-cross diagram to show the electron arrangement in a molecule of phosphine. Show outer shell electrons only.

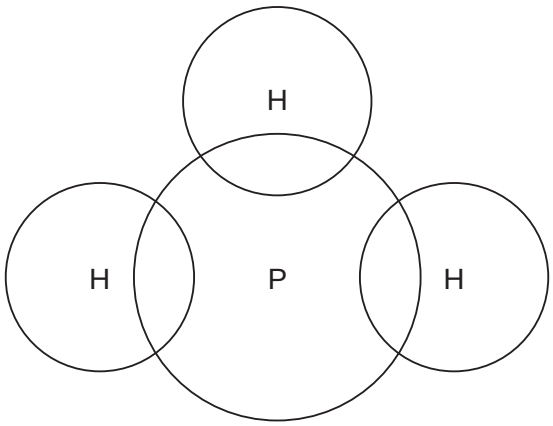

[2]

(e) Phosphine, PH_3, has a similar chemical structure to ammonia, NH_3.

Ammonia acts as a base when it reacts with sulfuric acid.

(i) What is meant by the term *base*?

..... [1]

(ii) Write a chemical equation for the reaction between ammonia and sulfuric acid.

..... [2]

[Total: 13]

www.exam-mate.com

4 Methanol is made industrially by reacting carbon monoxide with hydrogen. The gases react at a temperature of 250 °C and a pressure of 75 atmospheres.

$$CO(g) + 2H_2(g) \rightleftharpoons CH_3OH(g)$$

The forward reaction is exothermic.

(a) Suggest a source of hydrogen for this industrial process.

..... [1]

(b) Complete the table using only the words *increases*, *decreases* or *no change*.

	effect on the rate of the reverse reaction	effect on the equilibrium yield of $CH_3OH(g)$
adding a catalyst		no change
increasing the temperature	increases	
decreasing the pressure		

[4]

(c) Methanol is a member of the homologous series of alcohols.

(i) State **two** general characteristics of a homologous series.

1 .....

2 .....
[2]

(ii) Draw the structures of **two** different alcohols, each containing **three** carbon atoms. Show all of the atoms and all of the bonds.

Name these **two** alcohols.

name	name .....

[4]

www.exam-mate.com

(iii) What term is used to describe compounds with the same molecular formula but different structural formulae?

..... [1]

(d) Alcohols react with carboxylic acids to produce esters.

(i) The structure of ester **X** is shown.

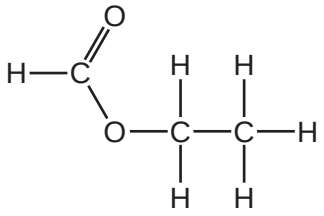

Name ester **X**.

..... [1]

(ii) Give the name of the carboxylic acid and the alcohol that react together to produce ester **X**.

carboxylic acid .....

alcohol .....
[2]

(iii) Ester **Y** is different from ester **X** but also has the formula $C_3H_6O_2$.

Draw the structure of ester **Y**. Show all of the atoms and all of the bonds.

.....
[2]

[Total: 17]

www.exam-mate.com

5 Copper(II) sulfate crystals, $CuSO_4.5H_2O$, are hydrated.

Copper(II) sulfate crystals are made by reacting copper(II) carbonate with dilute sulfuric acid.

The equation for the overall process is shown.

$$CuCO_3 + H_2SO_4 + 4H_2O \rightarrow CuSO_4.5H_2O + CO_2$$

step 1 Powdered solid copper(II) carbonate is added to 50.0 cm^3 of 0.05 mol / dm^3 sulfuric acid until the copper(II) carbonate is in excess.

step 2 The excess of copper(II) carbonate is separated from the aqueous copper(II) sulfate.

step 3 The aqueous copper(II) sulfate is heated until the solution is saturated.

step 4 The solution is allowed to cool and crystallise.

step 5 The crystals are removed and dried.

(a) Calculate the maximum mass of the copper(II) sulfate crystals, $CuSO_4.5H_2O$, that can form using the following steps.

- Calculate the number of moles of H_2SO_4 in 50.0 cm^3 of 0.05 mol / dm^3 H_2SO_4.

..... mol

- Determine the number of moles of $CuSO_4.5H_2O$ that can form.

..... mol

- The M_r of $CuSO_4.5H_2O$ is 250.

  Calculate the maximum mass of $CuSO_4.5H_2O$ that can form.

..... g
[3]

www.exam-mate.com

(b) **Steps 1–5** were done correctly but the mass of crystals obtained was less than the maximum mass.

Explain why.

..... [1]

(c) State **two** observations that would indicate that the copper(II) carbonate is in excess in **step 1**.

1 .....

2 .....
[2]

(d) When the reaction in **step 1** is done using lumps of copper(II) carbonate instead of powder, the rate of reaction decreases. All other conditions are kept the same.

Give a reason for this. Explain your answer in terms of particles.

.....

.....

..... [2]

(e) Name a different substance, other than copper(II) carbonate, that could be added to dilute sulfuric acid to produce copper(II) sulfate in **step 1**.

..... [1]

(f) Name the process used to separate the aqueous copper(II) sulfate from the excess of copper(II) carbonate in **step 2**.

..... [1]

(g) The solution of aqueous copper(II) sulfate was heated until it was saturated in **step 3**.

(i) Suggest what is meant by the term *saturated solution*.

.....

.....

..... [2]

(ii) What evidence would show that the solution was saturated in **step 3**?

..... [1]

(iii) Why should the aqueous copper(II) sulfate **not** be heated to dryness in **step 3**?

..... [1]

[Total: 14]

www.exam-mate.com

6 The halogens are the elements in Group VII of the Periodic Table.

(a) Predict the physical state and colour of astatine at room temperature and pressure.

physical state .....

colour .....
[2]

(b) When chlorine reacts with aqueous potassium bromide a displacement reaction occurs.

(i) Describe the colour change of the solution.

from ..... to .....
[2]

(ii) Write a chemical equation for this reaction.

..... [2]

(c) Reactions occur when some aqueous solutions of halogens are added to aqueous solutions of halides.

Use the key to complete the table to show the results of adding halogens to halides.

key
✓ = reaction
✗ = no reaction

		halides		
		$KCl(aq)$	$KBr(aq)$	$KI(aq)$
halogens	$Cl_2(aq)$		✓	
	$Br_2(aq)$			
	$I_2(aq)$			

[2]

[Total: 8]

© UCLES 2019

www.exam-mate.com

7 **(a)** Displacement reactions occur between metals and metal ions.

Displacement reactions can be used to determine the order of reactivity of metals such as lead (Pb), nickel (Ni), and silver (Ag).

The ionic equation for a displacement reaction is shown.

$$Ni(s) + Pb^{2+}(aq) \rightarrow Pb(s) + Ni^{2+}(aq)$$

The ionic half-equations for this reaction are shown.

$$Ni(s) \rightarrow Ni^{2+}(aq) + 2e^{-}$$

$$Pb^{2+}(aq) + 2e^{-} \rightarrow Pb(s)$$

The ionic half-equations show that electrons are donated by nickel atoms and accepted by lead ions.

(i) Identify the reducing agent in the displacement reaction. Give a reason for your answer.

reducing agent.....

reason.....
[2]

(ii) What is the general term given to the type of reaction in which electrons are transferred from one species to another?

..... [1]

(b) The ionic equation for another displacement reaction is shown.

$$Pb(s) + 2Ag^{+}(aq) \rightarrow 2Ag(s) + Pb^{2+}(aq)$$

Write the **two** ionic half-equations for this reaction.

1 .....

2 .....
[2]

(c) Use the information in **(a)** and **(b)** to put the **three** metals lead, nickel and silver in order of reactivity.

	most reactive
	↑
	least reactive

[1]

www.exam-mate.com

(d) Nickel is a transition element. Nickel is stronger than sodium.

Describe **two** other differences in the physical properties of nickel and sodium.

1 .....

2 .....
[2]

(e) Predict **one** difference in the appearance of aqueous solutions of nickel compounds compared to aqueous solutions of sodium compounds.

.....

..... [1]

(f) Copper is refined (purified) by electrolysis. Nickel can be refined using a similar method.

(i) The diagram shows the refining of nickel by electrolysis.

Complete the labels in the boxes.

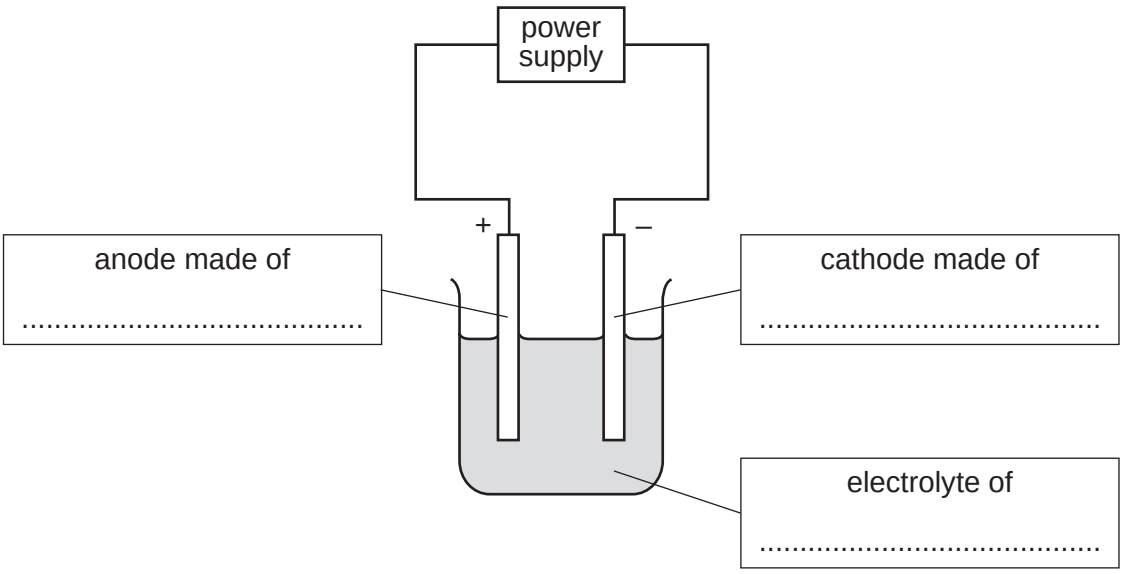

[3]

(ii) Indicate, by writing **N** on the diagram, where nickel is produced. [1]

[Total: 13]

www.exam-mate.com

BLANK PAGE

www.exam-mate.com

BLANK PAGE

www.exam-mate.com

BLANK PAGE

Permission to reproduce items where third-party owned material protected by copyright is included has been sought and cleared where possible. Every reasonable effort has been made by the publisher (UCLES) to trace copyright holders, but if any items requiring clearance have unwittingly been included, the publisher will be pleased to make amends at the earliest possible opportunity.

To avoid the issue of disclosure of answer-related information to candidates, all copyright acknowledgements are reproduced online in the Cambridge Assessment International Education Copyright Acknowledgements Booklet. This is produced for each series of examinations and is freely available to download at www.cambridgeinternational.org after the live examination series.

Cambridge Assessment International Education is part of the Cambridge Assessment Group. Cambridge Assessment is the brand name of the University of Cambridge Local Examinations Syndicate (UCLES), which itself is a department of the University of Cambridge.

www.exam-mate.com

The Periodic Table of Elements

Key

atomic number
atomic symbol
name
relative atomic mass

Group

I	II											III	IV	V	VI	VII	VIII
							1 H hydrogen 1										2 He helium 4
3 Li lithium 7	4 Be beryllium 9											5 B boron 11	6 C carbon 12	7 N nitrogen 14	8 O oxygen 16	9 F fluorine 19	10 Ne neon 20
11 Na sodium 23	12 Mg magnesium 24											13 Al aluminium 27	14 Si silicon 28	15 P phosphorus 31	16 S sulfur 32	17 Cl chlorine 35.5	18 Ar argon 40
19 K potassium 39	20 Ca calcium 40	21 Sc scandium 45	22 Ti titanium 48	23 V vanadium 51	24 Cr chromium 52	25 Mn manganese 55	26 Fe iron 56	27 Co cobalt 59	28 Ni nickel 59	29 Cu copper 64	30 Zn zinc 65	31 Ga gallium 70	32 Ge germanium 73	33 As arsenic 75	34 Se selenium 79	35 Br bromine 80	36 Kr krypton 84
37 Rb rubidium 85	38 Sr strontium 88	39 Y yttrium 89	40 Zr zirconium 91	41 Nb niobium 93	42 Mo molybdenum 96	43 Tc technetium –	44 Ru ruthenium 101	45 Rh rhodium 103	46 Pd palladium 106	47 Ag silver 108	48 Cd cadmium 112	49 In indium 115	50 Sn tin 119	51 Sb antimony 122	52 Te tellurium 128	53 I iodine 127	54 Xe xenon 131
55 Cs caesium 133	56 Ba barium 137	57–71 lanthanoids	72 Hf hafnium 178	73 Ta tantalum 181	74 W tungsten 184	75 Re rhenium 186	76 Os osmium 190	77 Ir iridium 192	78 Pt platinum 195	79 Au gold 197	80 Hg mercury 201	81 Tl thallium 204	82 Pb lead 207	83 Bi bismuth 209	84 Po polonium –	85 At astatine –	86 Rn radon –
87 Fr francium –	88 Ra radium –	89–103 actinoids	104 Rf rutherfordium –	105 Db dubnium –	106 Sg seaborgium –	107 Bh bohrium –	108 Hs hassium –	109 Mt meitnerium –	110 Ds darmstadtium –	111 Rg roentgenium –	112 Cn copernicium –		114 Fl flerovium –		116 Lv livermorium –		

lanthanoids	57 La lanthanum 139	58 Ce cerium 140	59 Pr praseodymium 141	60 Nd neodymium 144	61 Pm promethium –	62 Sm samarium 150	63 Eu europium 152	64 Gd gadolinium 157	65 Tb terbium 159	66 Dy dysprosium 163	67 Ho holmium 165	68 Er erbium 167	69 Tm thulium 169	70 Yb ytterbium 173	71 Lu lutetium 175
actinoids	89 Ac actinium –	90 Th thorium 232	91 Pa protactinium 231	92 U uranium 238	93 Np neptunium –	94 Pu plutonium –	95 Am americium –	96 Cm curium –	97 Bk berkelium –	98 Cf californium –	99 Es einsteinium –	100 Fm fermium –	101 Md mendelevium –	102 No nobelium –	103 Lr lawrencium –

The volume of one mole of any gas is 24 dm^3 at room temperature and pressure (r.t.p.).

© UCLES 2019

www.exam-mate.com